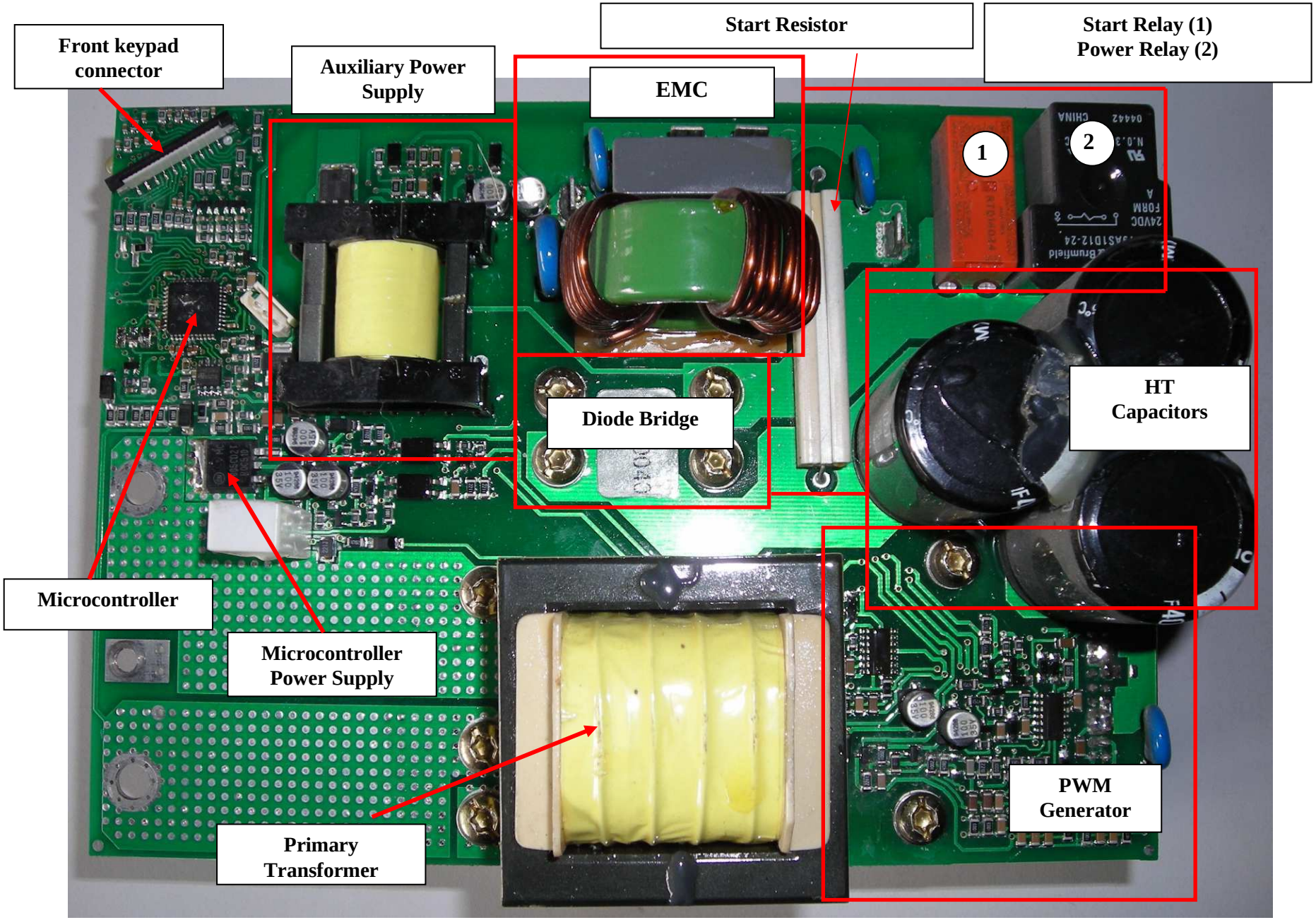
Front keypad connector
Auxiliary Power Supply
EMC
Start Resistor
Start Relay (1)
Power Relay (2)
1
2
Diode Bridge
HT Capacitors
Microcontroller
Microcontroller Power Supply
Primary Transformer
PWM Generator

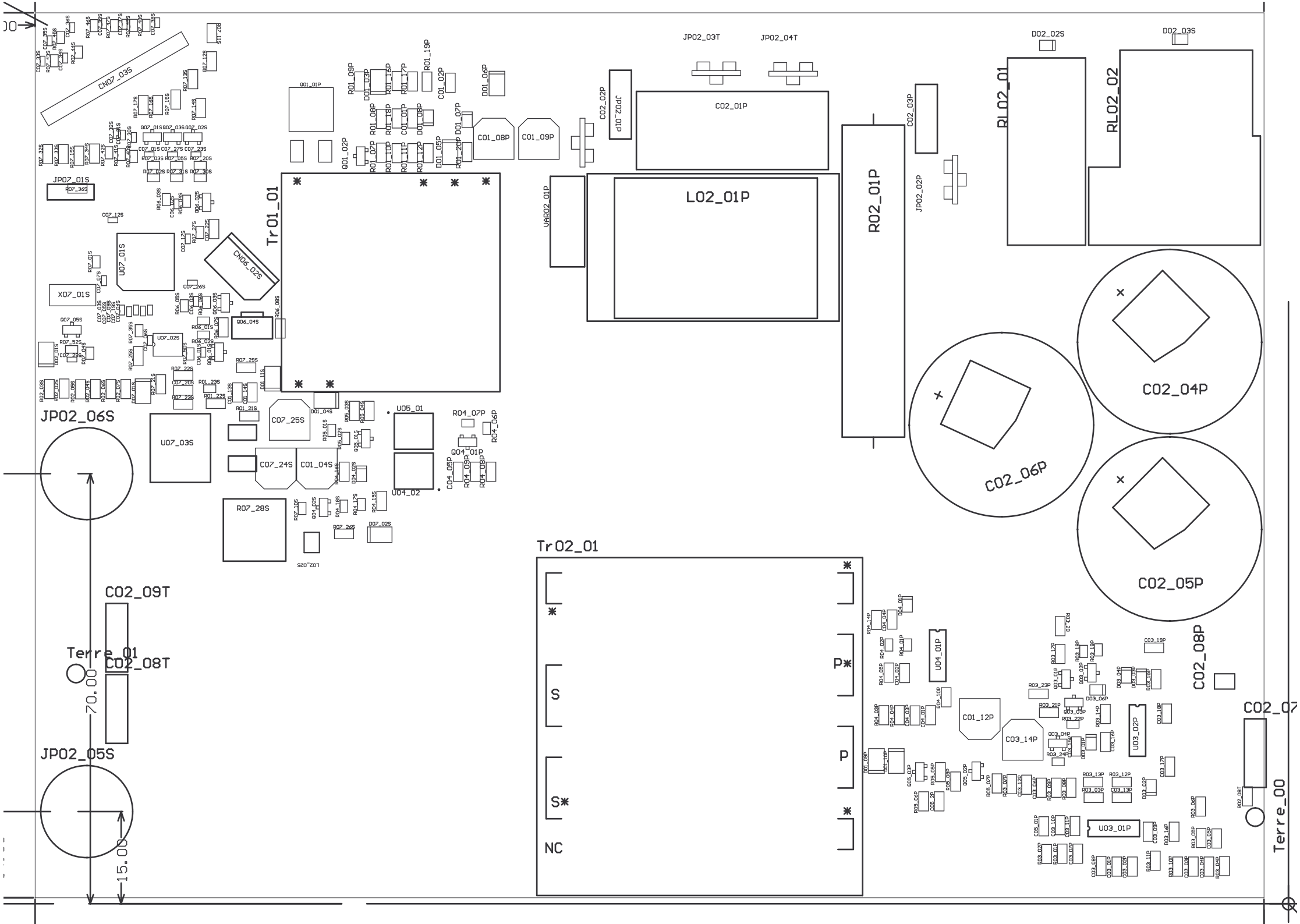
CN07_03S
JP07_01S
Q01_01P
Tr01_01
CN06_02S
U07_01S
X07_01S
U07_02S
U07_03S
JP02_06S
C07_25S
C07_24S
C01_04S
U05_01
U04_02
R07_28S
Q04_01P
C02_09T
C02_08T
Terre_01
70.00
JP02_05S
15.00
JP02_03T
JP02_04T
C02_01P
C01_08P
C01_09P
JP02_01P
C02_02P
VAR02_01P
L02_01P
R02_01P
C02_03P
JP02_02P
D02_02S
D02_03S
RL02_01
RL02_02
C02_04P
C02_06P
C02_05P
Tr02_01
S
S*
NC
P*
P
U04_01P
C01_12P
C03_14P
U03_02P
U03_01P
C02_08P
C02_07
Terre_00

Primaire

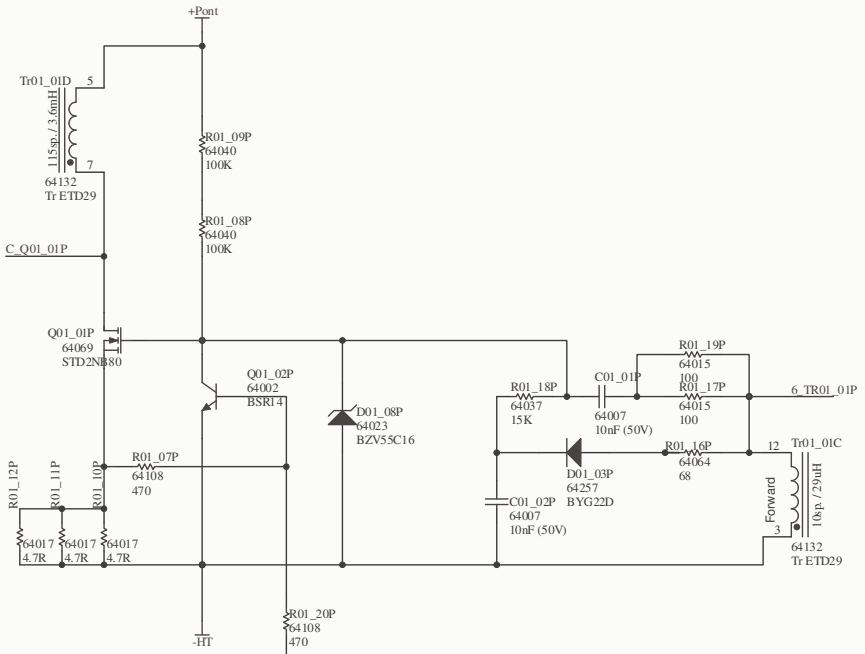

Secondaire

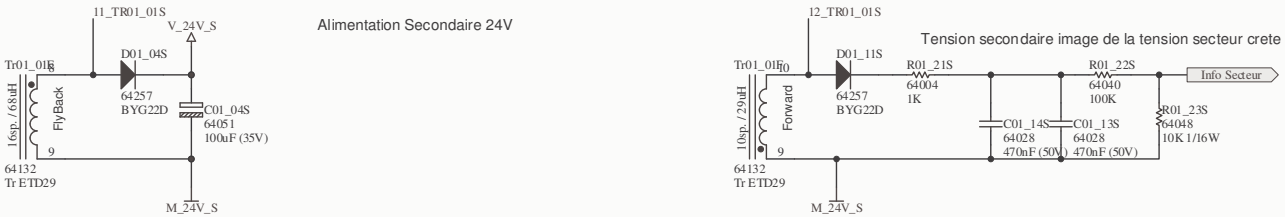

Title	*PCB GYSMI 165*		*GYS SA* *134, bld des loges* *53941 Saint BERTHEVIN* *FRANCE*
Size: A3	Number: 97022	Revision: Ind1_1	
Date: 16/09/2005	Time:	Sheet 2 of 6	
File: O:\mma\GYSMI 165\En cours de fabrication\Ind 1_1\PCB (fichiers PROTEL uniquement)\PCB Carte Puissance\Alim auto oscillante.S			

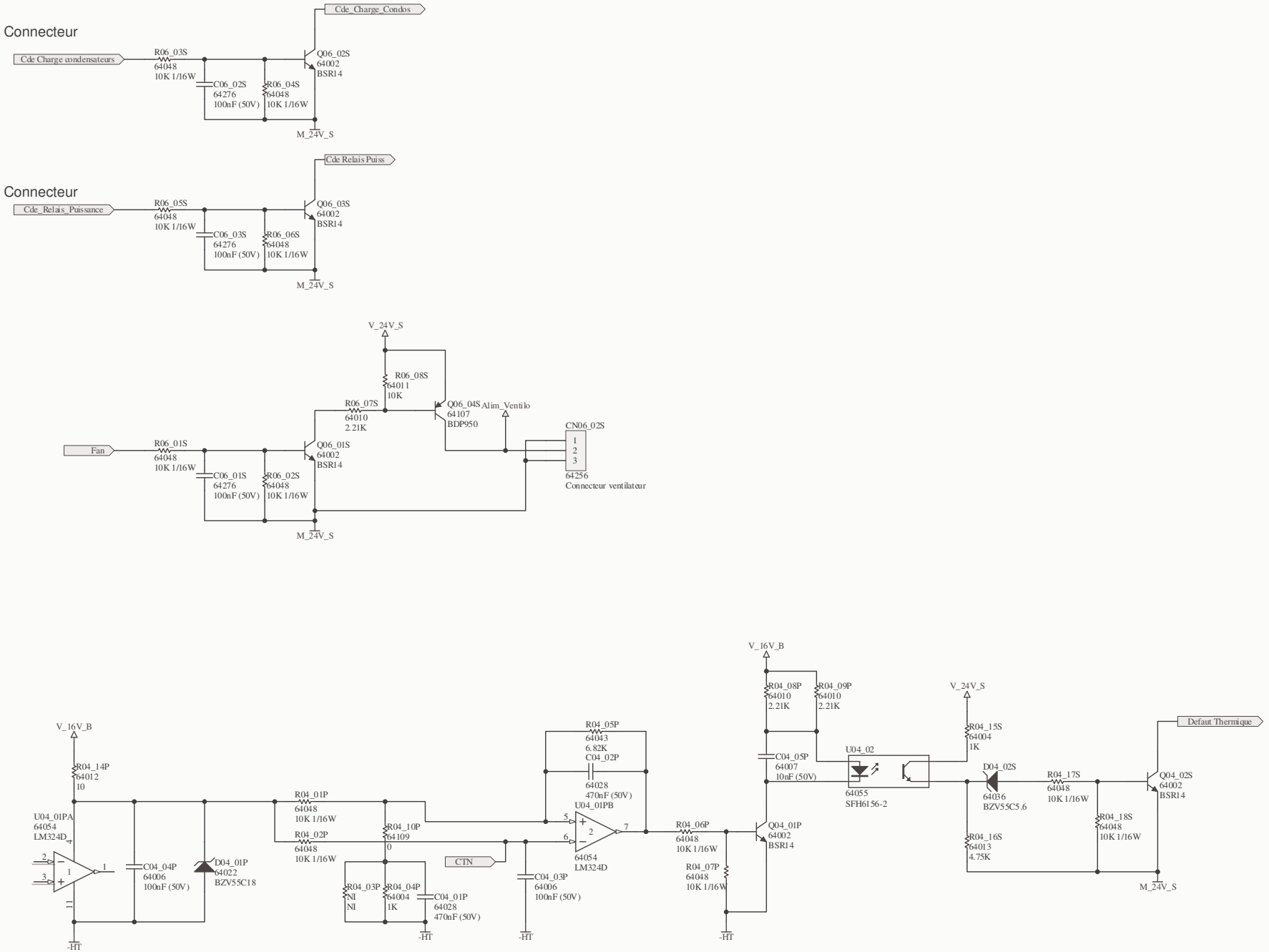

Title *PCB GYSMI 165*			*GYS SA* *134, bld des loges* *53941 Saint BERTHEVIN* *FRANCE*
Size: A3	Number: 97022	Revision: Ind1_1	
Date: 16/09/2005	Time:	Sheet 5 of 6	
File: O:\mma\GYSMI 165\En cours de fabrication\Ind 1_1\PCB (fichiers PROTEL uniquement)\PCB Carte Puissance\Autres fonctions.Sch			

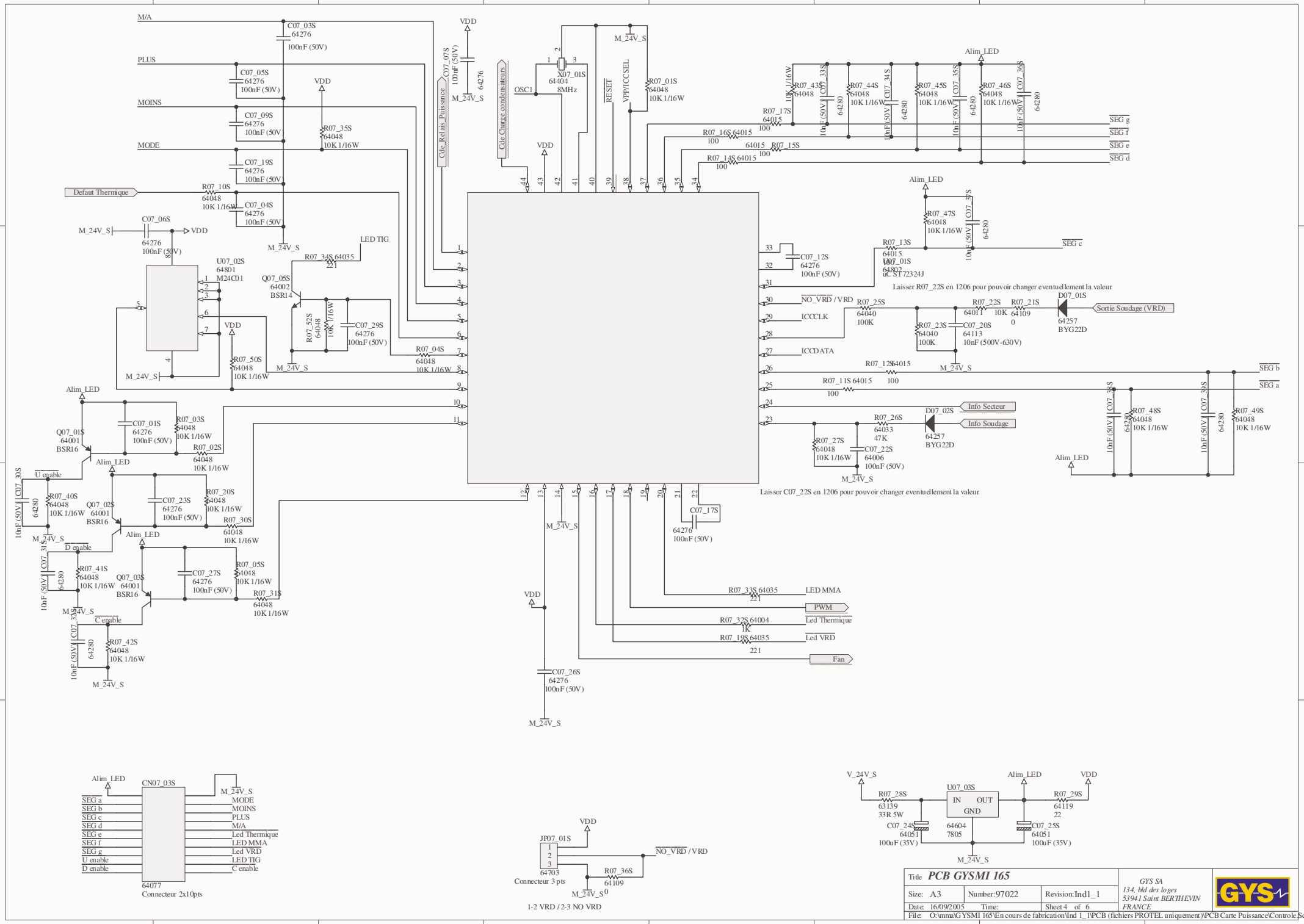
M/A
PLUS
MOINS
MODE
Defaut Thermique
C07_03S 64276 100nF (50V)
C07_05S 64276 100nF (50V)
C07_09S 64276 100nF (50V)
C07_19S 64276 100nF (50V)
C07_04S 64276 100nF (50V)
R07_10S 64048 10K 1/16W
R07_35S 64048 10K 1/16W
C07_06S 64276 100nF (50V)
U07_02S 64801 M24C01
Q07_05S 64002 BSR14
R07_34S 64035 221
LED TIG
R07_52S 64048 10K 1/16W
C07_29S 64276 100nF (50V)
R07_04S 64048 10K 1/16W
R07_50S 64048 10K 1/16W
C07_07S 100nF (50V) 64276
Cle Relais Puissance
Cle Charge condensateurs
X07_01S 64404 8MHz
OSC1
RESET
VPP/ICCSEL
R07_01S 64048 10K 1/16W
VDD
M_24V_S
Alim_LED
R07_43S 64048 10K 1/16W
C07_33S 64280 10nF (50V)
R07_44S 64048 10K 1/16W
C07_34S 64280 10nF (50V)
R07_45S 64048 10K 1/16W
C07_35S 64280 10nF (50V)
R07_46S 64048 10K 1/16W
C07_36S 64280 10nF (50V)
R07_17S 64015 100
R07_16S 64015 100
R07_15S 64015 100
R07_14S 64015 100
SEG g
SEG f
SEG e
SEG d
R07_47S 64048 10K 1/16W
C07_37S 64280 10nF (50V)
R07_13S 64015 100
U07_01S 64802 IC ST72324J
SEG c
C07_12S 64276 100nF (50V)
Laisser R07_22S en 1206 pour pouvoir changer eventuellement la valeur
NO_VRD / VRD
ICCCLK
ICCDATA
R07_25S 64040 100K
R07_22S 64011 10K
R07_21S 64109 0
D07_01S 64257 BYG22D
Sortie Soudage (VRD)
R07_23S 64040 100K
C07_20S 64113 10nF (500V-630V)
R07_12S 64015 100
R07_11S 64015 100
SEG b
SEG a
D07_02S 64257 BYG22D
Info Secteur
Info Soudage
R07_26S 64033 47K
R07_27S 64048 10K 1/16W
C07_22S 64006 100nF (50V)
Laisser C07_22S en 1206 pour pouvoir changer eventuellement la valeur
C07_38S 64280 10nF (50V)
R07_48S 64048 10K 1/16W
C07_39S 64280 10nF (50V)
R07_49S 64048 10K 1/16W
C07_17S 64276 100nF (50V)
Q07_01S 64001 BSR16
C07_01S 64276 100nF (50V)
R07_03S 64048 10K 1/16W
R07_02S 64048 10K 1/16W
U enable
C07_30S 64280 10nF (50V)
R07_40S 64048 10K 1/16W
Q07_02S 64001 BSR16
C07_23S 64276 100nF (50V)
R07_20S 64048 10K 1/16W
R07_30S 64048 10K 1/16W
D enable
C07_31S 64280 10nF (50V)
R07_41S 64048 10K 1/16W
Q07_03S 64001 BSR16
C07_27S 64276 100nF (50V)
R07_05S 64048 10K 1/16W
R07_31S 64048 10K 1/16W
C enable
C07_33S 64280 10nF (50V)
R07_42S 64048 10K 1/16W
R07_33S 64035 221
LED MMA
PWM
R07_32S 64004 1K
Led Thermique
R07_19S 64035 221
Led VRD
Fan
C07_26S 64276 100nF (50V)
CN07_03S
SEG a
SEG b
SEG c
SEG d
SEG e
SEG f
SEG g
U enable
D enable
MODE
MOINS
PLUS
M/A
Led Thermique
LED MMA
Led VRD
LED TIG
C enable
64077
Connecteur 2x10pts
JP07_01S
64703
Connecteur 3 pts
R07_36S 64109 0
NO_VRD / VRD
1-2 VRD / 2-3 NO VRD
V_24V_S
R07_28S 63139 33R 5W
C07_24S 64051 100uF (35V)
U07_03S
IN OUT GND
64604 7805
R07_29S 64119 22
C07_25S 64051 100uF (35V)
Title PCB GYSMI 165
Size: A3
Number: 97022
Revision: Ind1_1
Date: 16/09/2005
Time:
Sheet 4 of 6
File: O:\mma\GYSMI 165\En cours de fabrication\Ind 1_1\PCB (fichiers PROTEL uniquement)\PCB Carte Puissance\Controle.SchDoc
GYS SA
134, bld des loges
53941 Saint BERTHEVIN
FRANCE
GYS

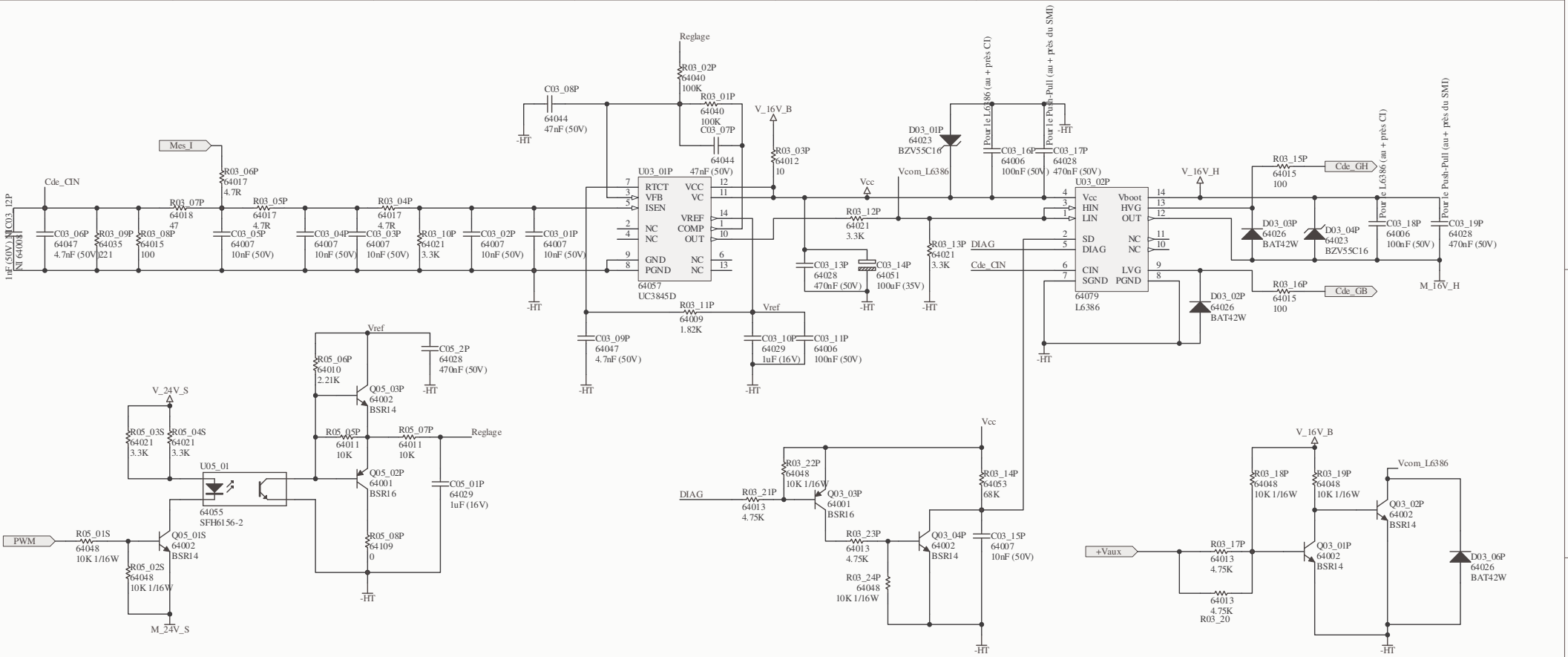

Title	PCB GYSMI 165		GYS SA 134, bld des loges 53941 Saint BERTHEVIN FRANCE
Size: A3	Number: 97022	Revision: Ind1_1	
Date: 16/09/2005	Time:	Sheet 3 of 6	
File: O:\mma\GYSMI 165\En cours de fabrication\Ind 1_1\PCB (fichiers PROTEL uniquement)\PCB Carte Puissance\PWM.SchDoc			

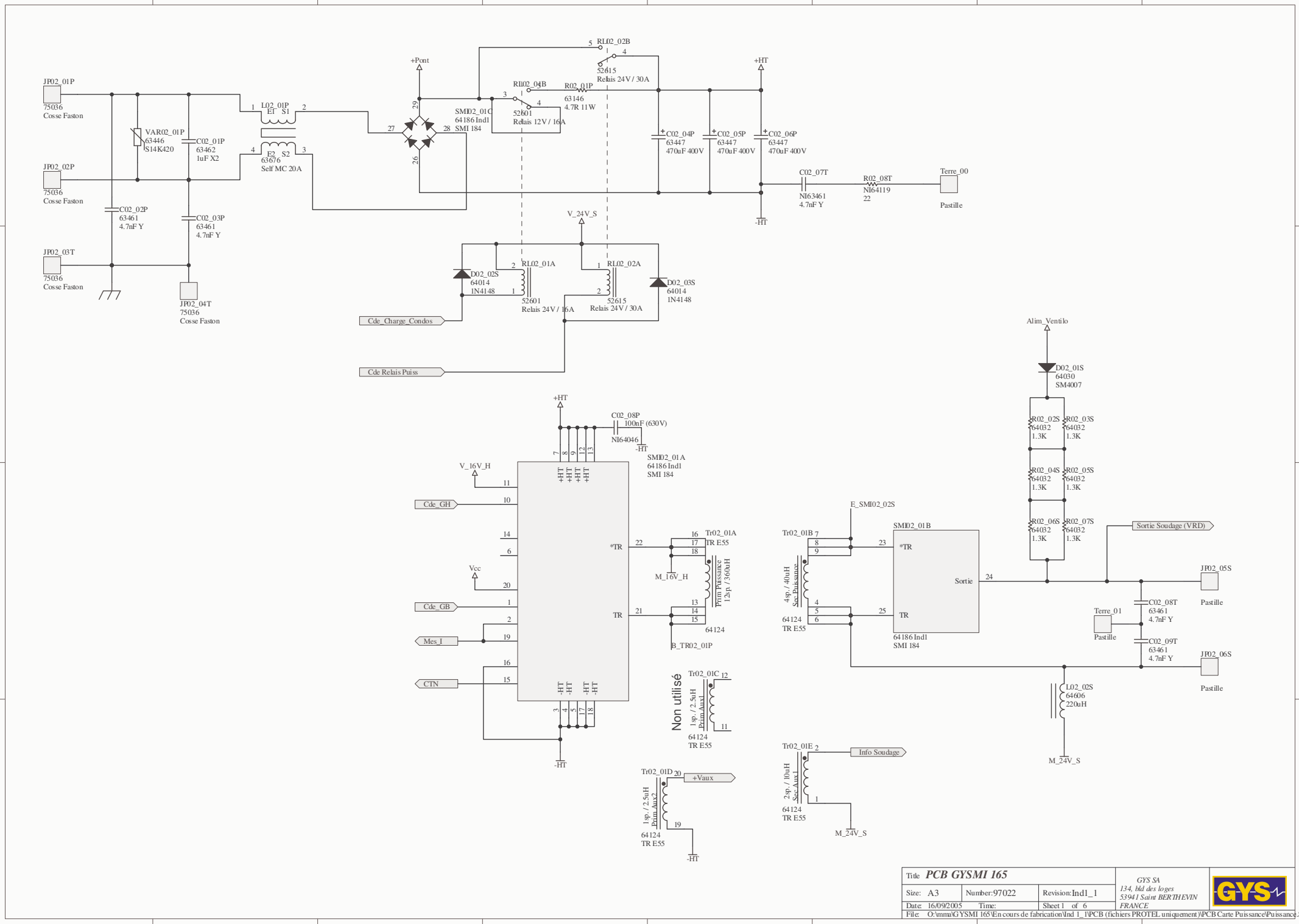
JP02_01P
75036
Cosse Faston
JP02_02P
75036
Cosse Faston
JP02_03T
75036
Cosse Faston
JP02_04T
75036
Cosse Faston
VAR02_01P
63446
S14K420
C02_01P
63462
1uF X2
C02_02P
63461
4.7nF Y
C02_03P
63461
4.7nF Y
L02_01P
E1 S1
E2 S2
63676
Self MC 20A
+Pont
SMI02_01C
64186 Ind1
SMI 184
RL02_02B
52615
Relais 24V / 30A
RL02_04B
52601
Relais 12V / 16A
R02_01P
63146
4.7R 11W
+HT
-HT
C02_04P
63447
470uF 400V
C02_05P
63447
470uF 400V
C02_06P
63447
470uF 400V
C02_07T
NI63461
4.7nF Y
R02_08T
NI64119
22
Terre_00
Pastille
V_24V_S
RL02_01A
52601
Relais 24V / 16A
RL02_02A
52615
Relais 24V / 30A
D02_02S
64014
1N4148
D02_03S
64014
1N4148
Cde_Charge_Condos
Cde Relais Puiss
C02_08P
100nF (630V)
NI64046
SMI02_01A
64186 Ind1
SMI 184
V_16V_H
Cde_GH
Vcc
Cde_GB
Mes_I
CTN
*TR
TR
Tr02_01A
TR E55
M_16V_H
Prim Puissance
12sp. / 360uH
64124
B_TR02_01P
Non utilisé
Tr02_01C
1sp. / 2.5uH
Prim Aux1
64124
TR E55
Tr02_01D
+Vaux
1sp. / 2.5uH
Prim Aux2
64124
TR E55
Alim_Ventilo
D02_01S
64030
SM4007
R02_02S
64032
1.3K
R02_03S
64032
1.3K
R02_04S
64032
1.3K
R02_05S
64032
1.3K
R02_06S
64032
1.3K
R02_07S
64032
1.3K
Sortie Soudage (VRD)
E_SMI02_02S
Tr02_01B
4sp. / 40uH
Sec Puissance
64124
TR E55
SMI02_01B
*TR
Sortie
TR
64186 Ind1
SMI 184
JP02_05S
Pastille
C02_08T
63461
4.7nF Y
Terre_01
Pastille
C02_09T
63461
4.7nF Y
JP02_06S
Pastille
L02_02S
64606
220uH
M_24V_S
Tr02_01E
2sp. / 10uH
Sec Aux1
64124
TR E55
Info Soudage
M_24V_S
Title PCB GYSMI 165
Size: A3
Number: 97022
Revision: Ind1_1
Date: 16/09/2005
Time:
Sheet 1 of 6
GYS SA
134, bld des loges
53941 Saint BERTHEVIN
FRANCE
GYS
File: O:\mma\GYSMI 165\En cours de fabrication\Ind 1_1\PCB (fichiers PROTEL uniquement)\PCB Carte Puissance\Puissance.SchDoc

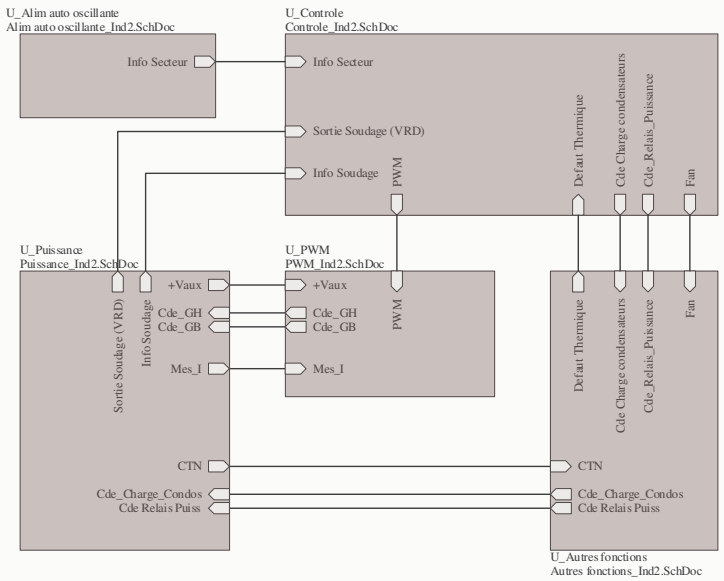

Title	***PCB GYSMI 165***		*GYS SA* *134, bld des loges* *53941 Saint BERTHEVIN* *FRANCE*
Size: A3	Number: 97022	Revision: Ind2	
Date: 02/08/2005	Time:	Sheet 6 of 6	
File: O:\mma\GYSMI 165\En cours de developpement\Ind2\PCB (fichiers PROTEL uniquement)\PCB Carte Puissance\Schema Bloc_Ind2.			